Sage Roller Door
Technical Information

Important

Pelmet Height

40 mm + cabinet top thickness
(for **all** roller door sizes)

Fascia Width

Minimum **28 mm** + cabinet overlay
(new track is 5 mm wider than before)

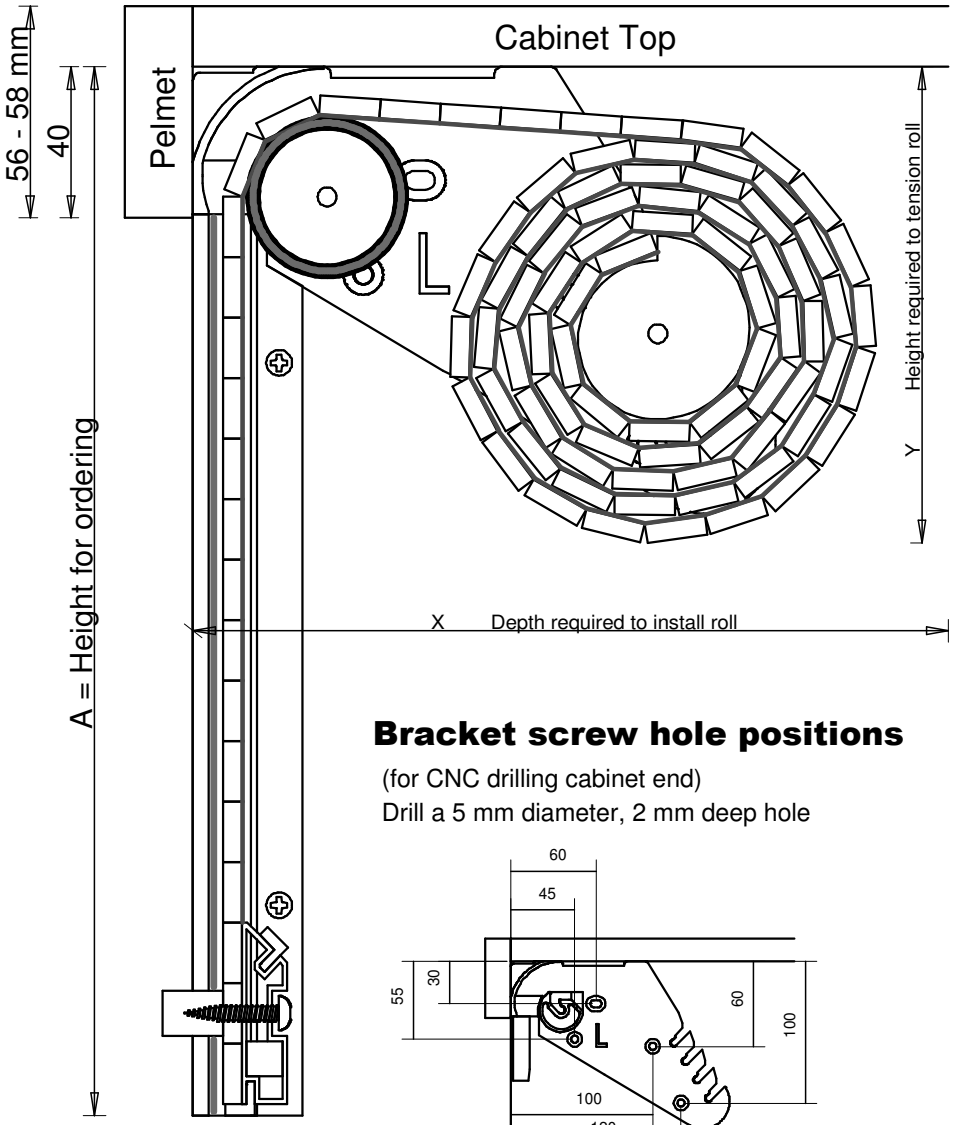

Size of Aluminium Surround

When ordering an aluminium surround please include the overall surround size. If the top overlay is greater than 16 mm you will have to make a 12 mm rebate on the bottom front edge of the cabinet top

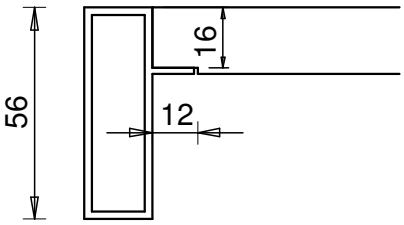

Aluminium Pelmet is ALWAYS 56 mm
Aluminium Side Fascia is ALWAYS 45 mm

Bracket screw hole positions

(for CNC drilling cabinet end)
Drill a 5 mm diameter, 2 mm deep hole

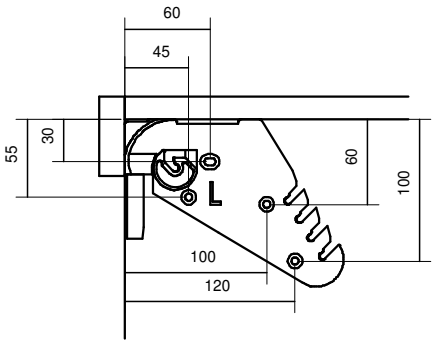

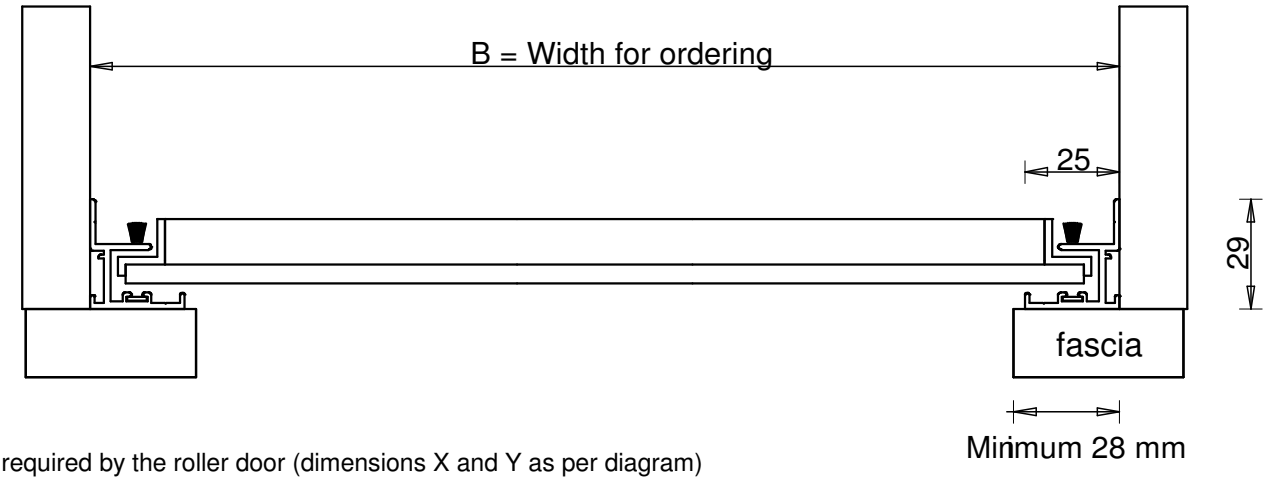

Space required by the roller door (dimensions X and Y as per diagram)

Height	400	500	600	700	800	900	1000	1100	1200	1300	1400	1500	1600	1700	1800	1900	2000
X Depth	175	178	180	191	194	196	198	200	202	212	214	217	219	221	223	230	232
Y Height	110	113	115	130	133	135	137	139	141	157	159	162	164	166	168	180	182
Slot	1	1	1	2	2	2	2	2	2	3	3	3	3	3	3	4	4